PARTS BREAKDOWN

ITEM	DESCRIPTION	MODEL NO.	ITEM NO.
1	AXION SHOWER HEAD	SP829 AXION	10001845
2	VALVE ASSEMBLY	SP260.158	10004250
3	PULL ROD	SP200	10002978
4	AXION EYE WASH HEAD	SP65CTFP	10001850
5	SAFETY SIGN	SP178	10003218
6	PUSH FLAG	-	10001661
7	SP222 (Grate)	SP222	10001762
8	GROUND BRACKET	-	10003380
9	DRAIN CHECK VALVE ASSY	SP82	10000278
10	FREEZE PROOF VALVE ASSY	MK81A	10005402
11	WATER INLET	-	-

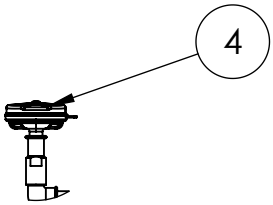

DETAIL A
SCALE 1 : 10

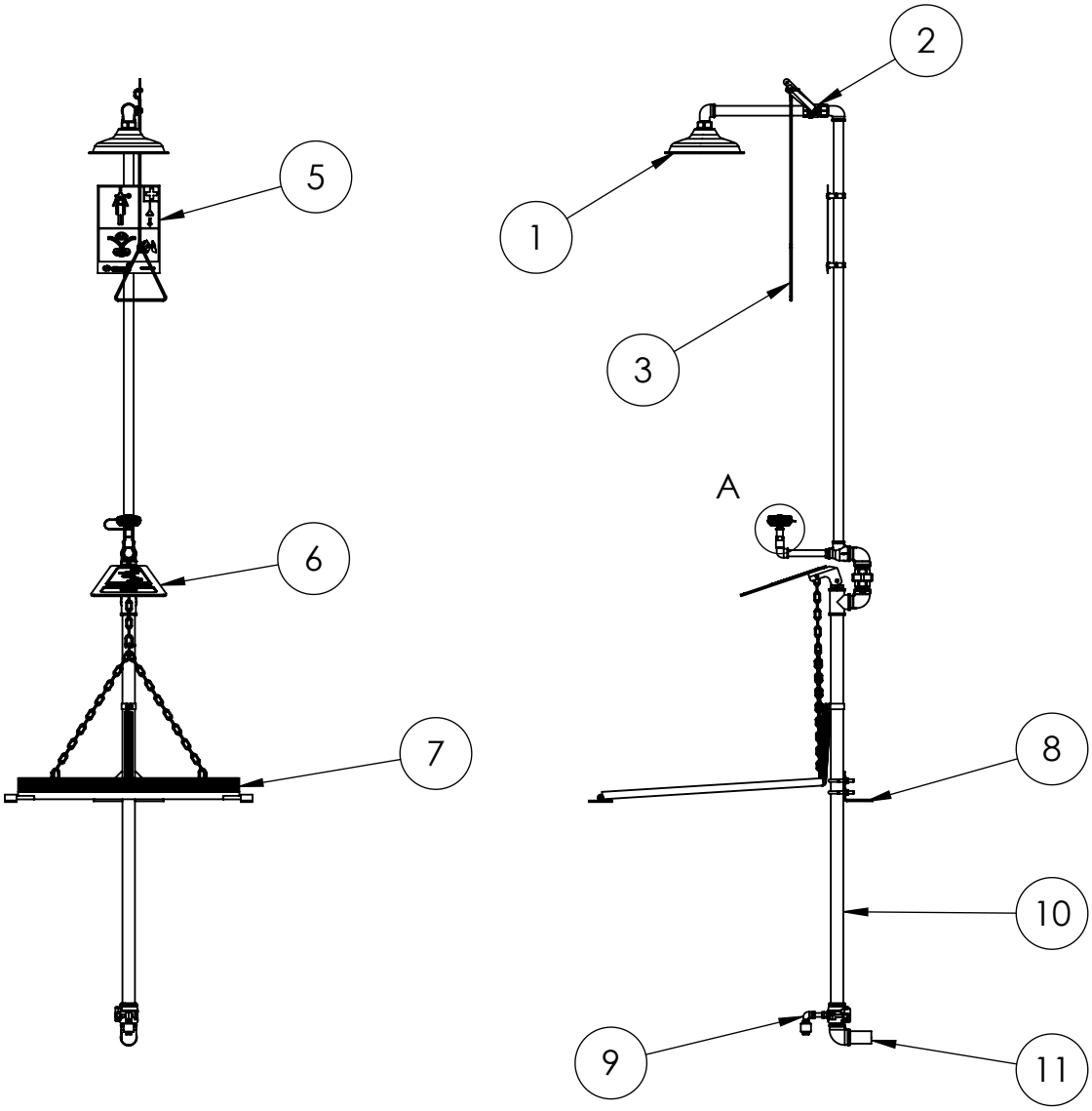

REV	DESCRIPTION	ECN NO.	DATE	BY
A			17.11.2025	AR

REVISIONS

CATEGORY

MATERIAL: -

TITLE: 8352FP AXION

SPECIFICATION: ASSEMBLY

-

SURFACE: -	WEIGHT (kg): 36.81
APPROVALS	DATE
MODELLED: AR	27.05.2025
DRAWN: AR	27.05.2025
REVISED: AR	02.12.2025
CHECKED	

PART NO. 10010628

Haws EUROPE | MIDDLE EAST | AFRICA
T +41 (0)34 420 60 00
BACHWEG 3
3400 BURGDORF
SWITZERLAND
www.haws.ch
info@haws.ch

THIS DOCUMENT AND THE DATA DISCLOSED HEREIN OR HEREWITH IS NOT TO BE REPRODUCED, USED, OR DISCLOSED IN WHOLE OR IN PART TO ANYONE WITHOUT THE PERMISSION OF HAWS CORPORATION.

SCALE 1:20 | SHEET 1 OF 3

General tolerances ISO 2768-mK

SIZE	DOCUMENT NO.	REV.
A4	0022973	A